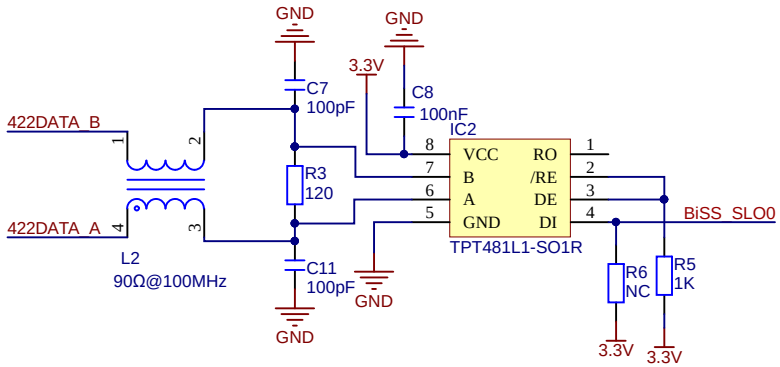

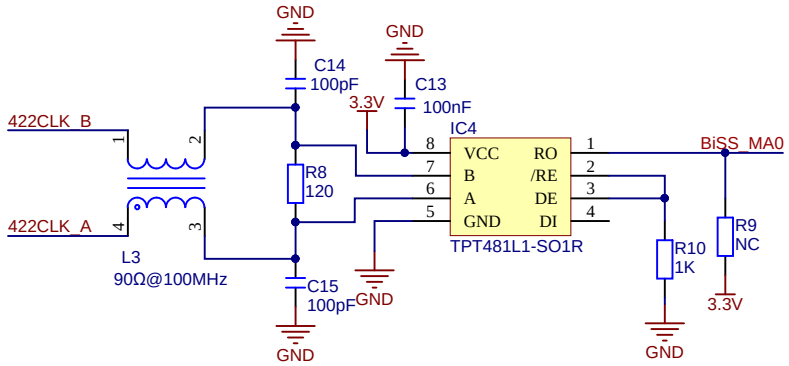

BiSS Slave Communication Circuit

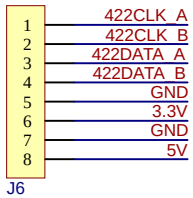

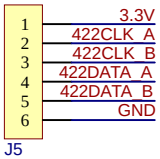

BiSS Terminal Block

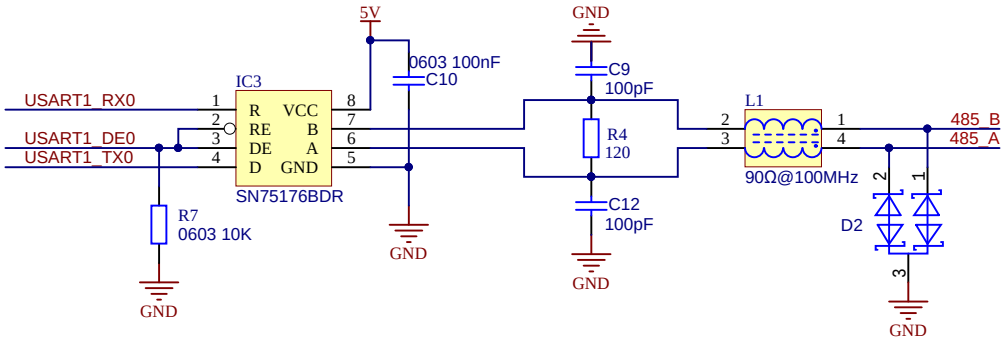

RS-485 Communication Circuit

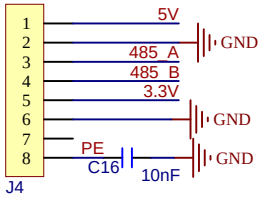

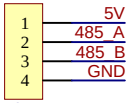

RS-485 Terminal Block

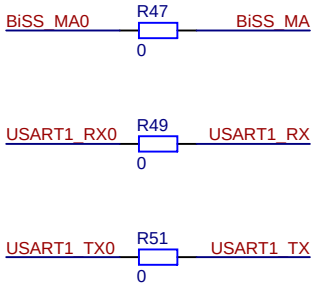

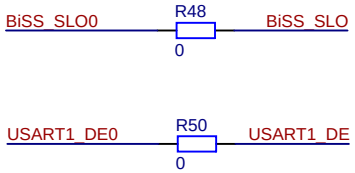

Geehy	ProjectName	G32R430 Tiny Board	
	DocumentName	RS-485 & BiSS Slave Communication Circuit.SchDoc	
	Page Number	1/4	Date 20261118

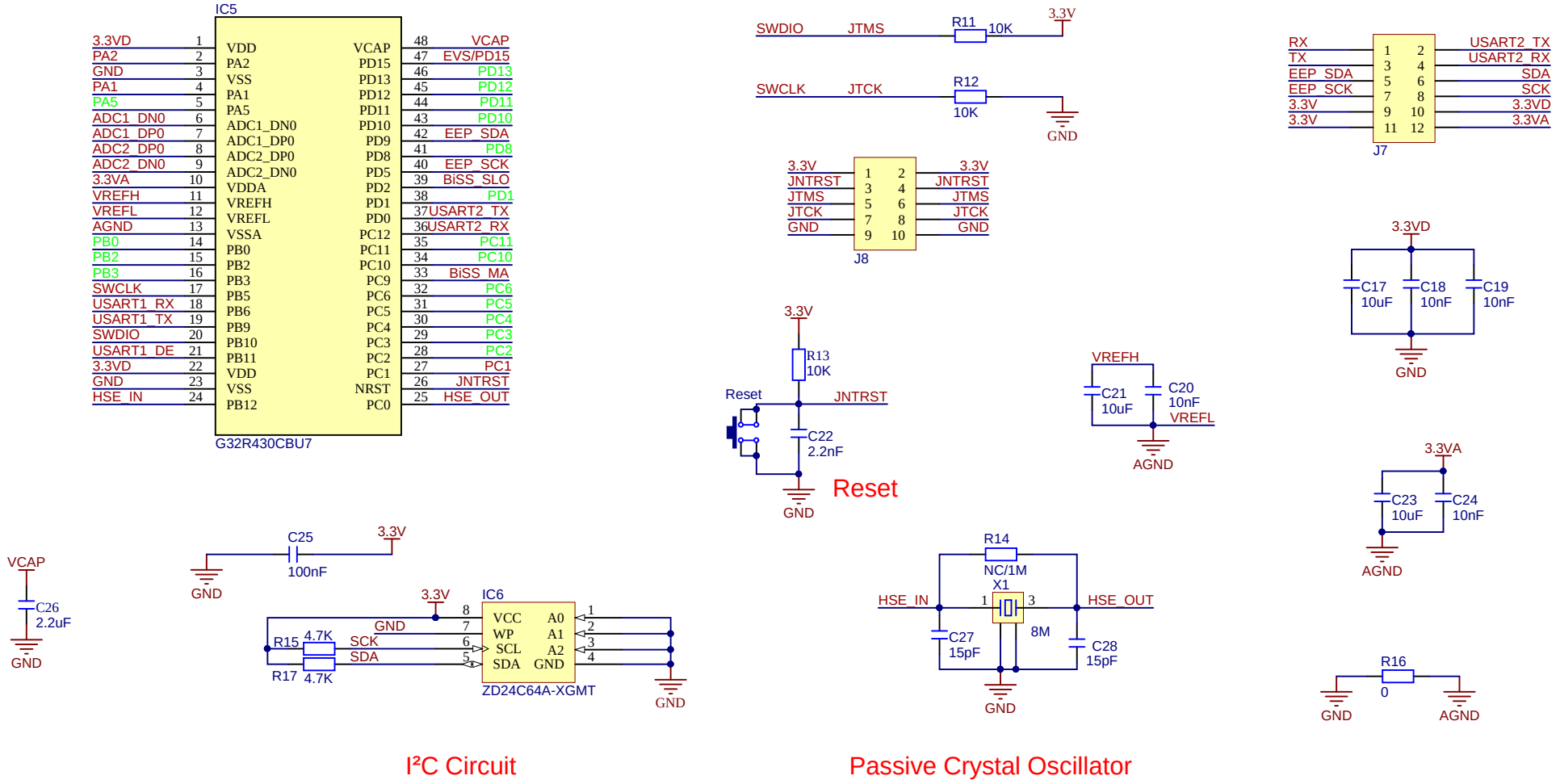

Geehy	ProjectName	G32R430 Tiny Board	
	DocumentName	R430_MCU.SchDoc	
	Page Number	2/4	Date 20261118

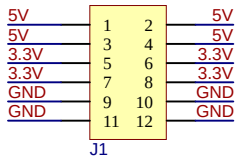

5V & 3.3V Power Supply

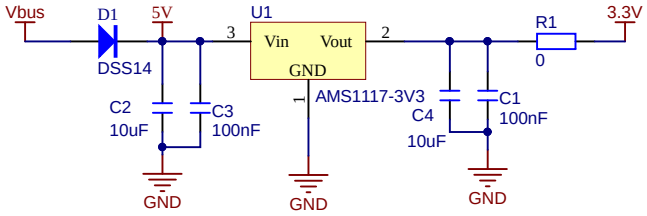

Power Supply

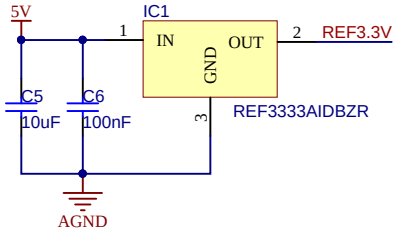

3.3V Reference Voltage

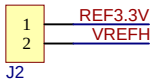

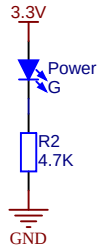

3.3V LED

Geehy	ProjectName	G32R430 Tiny Board	
	DocumentName	Power Supply Circuit.SchDoc	
	Page Number	3/4	Date 20261118

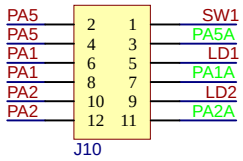

Jumper

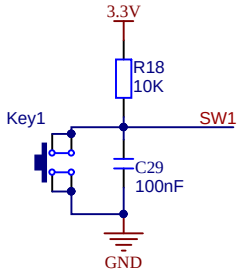

Button

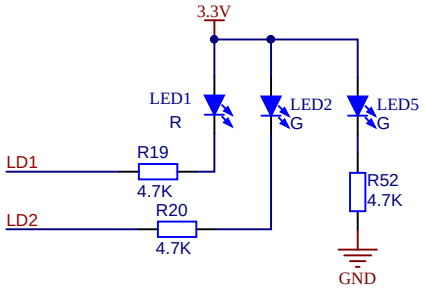

LED

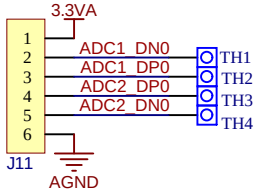

16-bit ADC

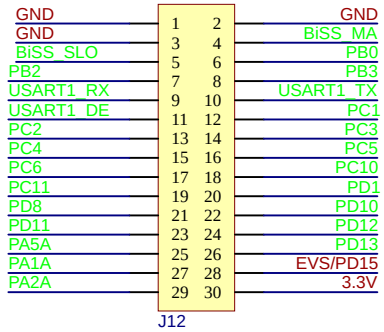

Dual-Row Pin Header

Geehy	ProjectName	G32R430 Tiny Board	
	DocumentName	16-bit ADC, Button & LED Circuit.SchDoc	
	Page Number	4/4	Date 20261118